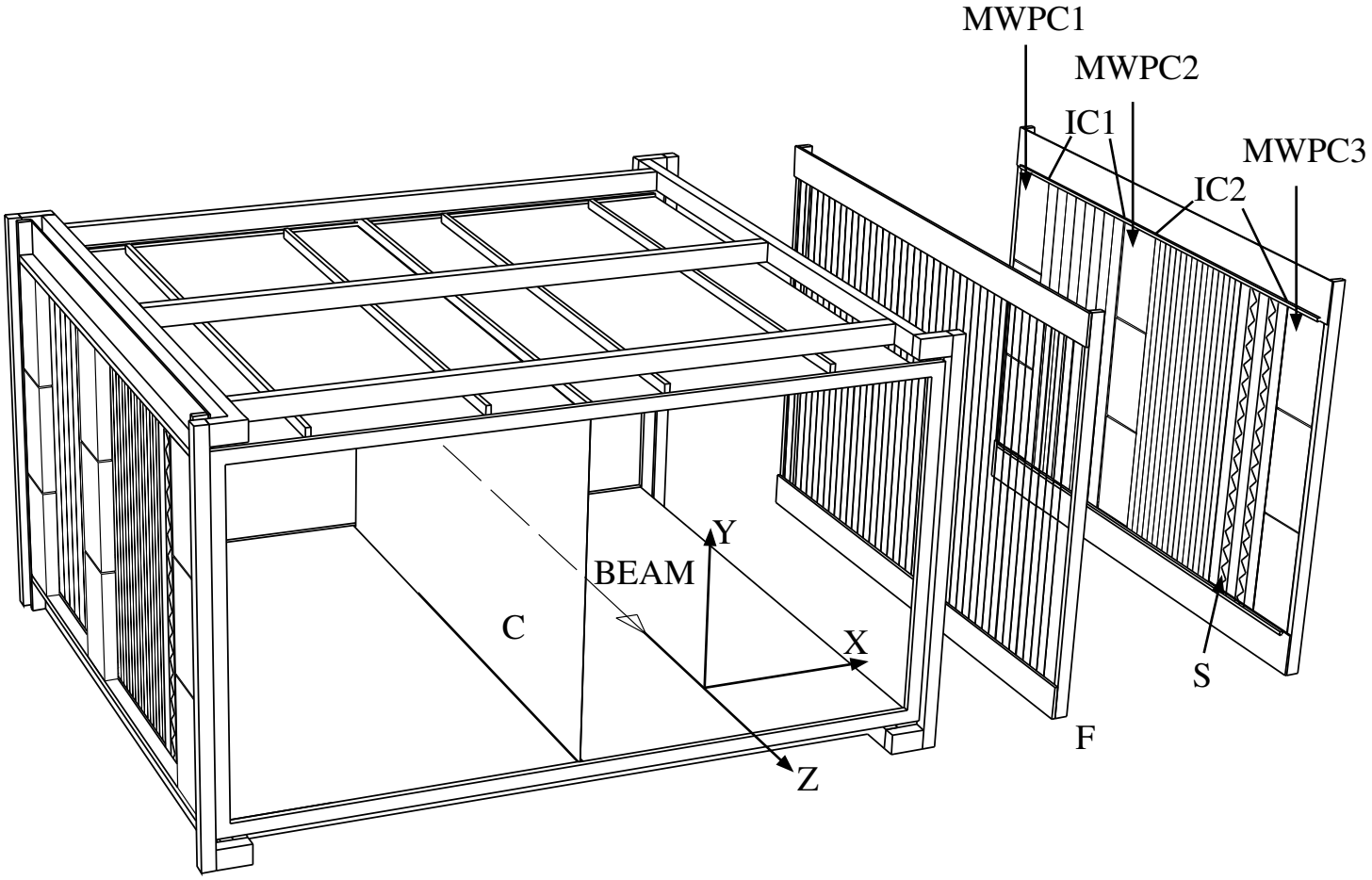
MWPC1
MWPC2
IC1
MWPC3
IC2
Y
BEAM
C
X
S
F
Z