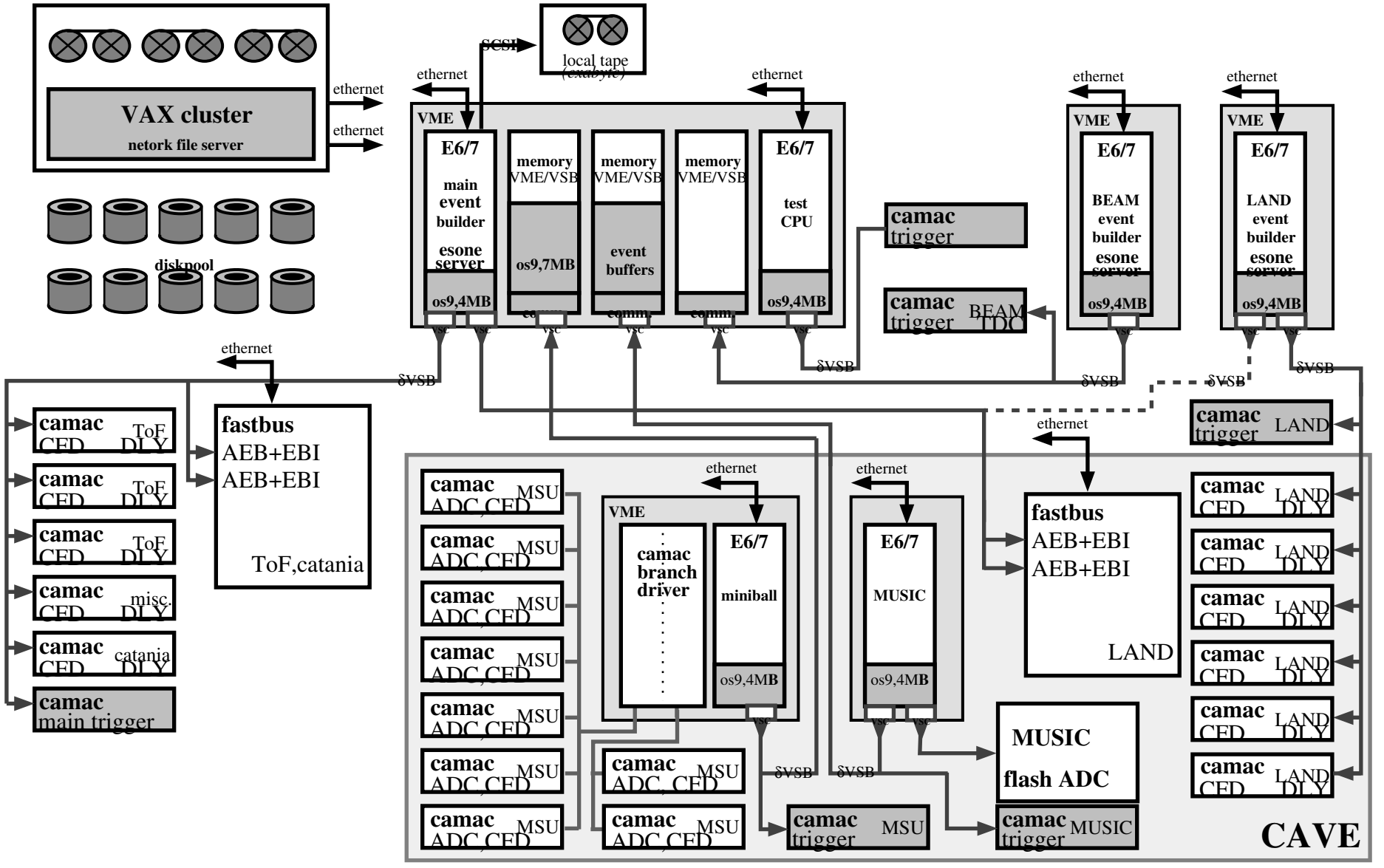
VAX cluster
netork file server
ethernet
ethernet
diskpool
SCSI
local tape
(exabyte)
ethernet
VME
E6/7
main
event
builder
esone
server
os9,4MB
memory
VME/VSB
os9,7MB
memory
VME/VSB
event
buffers
memory
VME/VSB
E6/7
test
CPU
os9,4MB
camac
trigger
camac
trigger
BEAM
TDC
VME
E6/7
BEAM
event
builder
esone
server
os9,4MB
VME
E6/7
LAND
event
builder
esone
server
os9,4MB
δVSB
camac
CFD
ToF
DLY
camac
CFD
ToF
DLY
camac
CFD
ToF
DLY
camac
CFD
misc.
DLY
camac
CFD
catania
DLY
camac
main trigger
fastbus
AEB+EBI
AEB+EBI
ToF,catania
camac
trigger
LAND
camac
ADC,CFD
MSU
camac
branch
driver
E6/7
miniball
os9,4MB
E6/7
MUSIC
os9,4MB
fastbus
AEB+EBI
AEB+EBI
LAND
camac
CFD
LAND
DLY
MUSIC
flash ADC
camac
trigger
MSU
camac
trigger
MUSIC
CAVE